Magnetic Float Level Transmitter

visit our website

FineTek
Your Made-To-Order Solutions

INTRODUCTION

WORKING PRINCIPLE

The "Magnet Float Level Transmitter" is composed of
a float and sensing rod (shown below). As the float is raised or lowered by the liquid level, the sensing rod will induce a resistance output, which is directly proportional to the liquid level.
The Magnet Float Level Transmitter is a sturdy, reliable and durable device that is applicable across most industries.

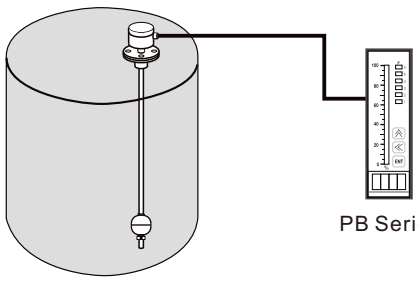

APPLICATIONS

Waste water treatment + Turn-key facilities
Electric power plants + Shipping vessels
Hydraulic facilities + Chemical industrial equipments
Petrochemical industries
Hot coal boiler. e.g. diesel engine generators, motor oil meters, oil material storage tanks.

CONSTRUCTION

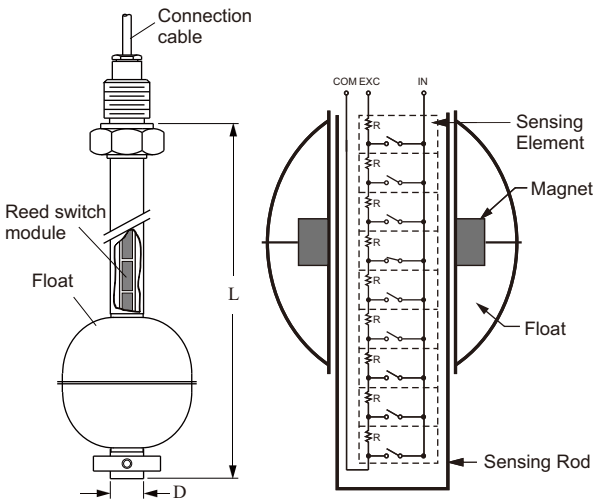

FEATURES

- Optional TAB-2100 (see p3) to produce a 0/4~20mA signal
- Optional PB series bargraphic display scaling panel meter for level control and display
- Sensing elements are protected with a plastic package for safety in use and transport.
- High performance and reliable electric circuit modular design (fig.2)
- Lower installation costs, maintenance, personnel training reduced and decreased plant shock downtime
- Explosion Proof series available
- Marine Standards: ABS, DNV, BV, LR, GL series available

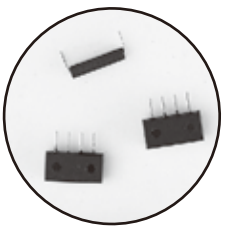

Fig.1
Sensing Element

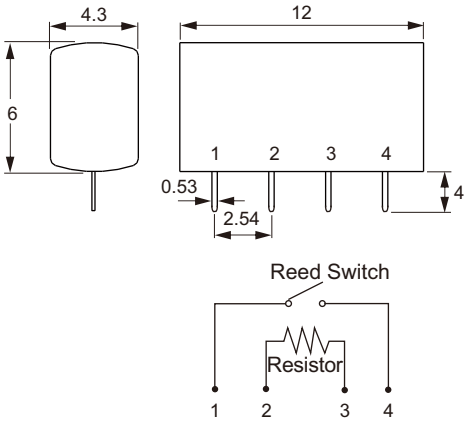

Fig.2
Sensing Element Size

SCHEMATIC DIAGRAMS

1. Sensing Rod
2. Float
3. Transmitter
4. Display Unit

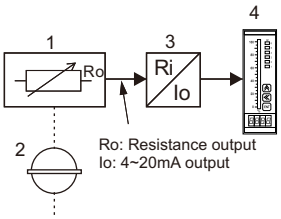

FineTek

HOUSING DIMENSIONS

B

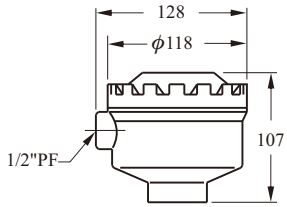

Material : Aluminum
Enclosure : IP65
Max.Temp.: -20°C ~200°C

C

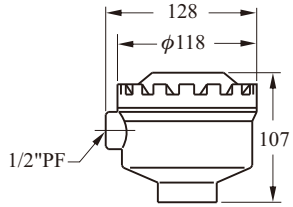

Material : PP+Fiber
Enclosure : IP65
Max.Temp.: -20°C ~80°C

D

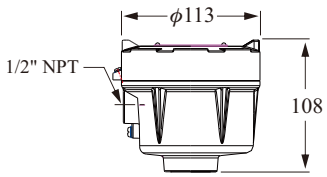

Material : Aluminum
Enclosure : IP65
Max.Temp.: -20°C ~200°C

E

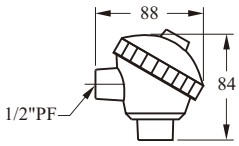

Material : Aluminum
Enclosure : IP65
Max.Temp.: -20°C ~200°C

F

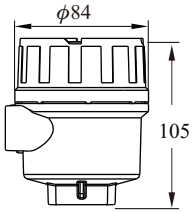

Material : Aluminum
Enclosure : IP65
Max.Temp.: -20°C ~180°C

G

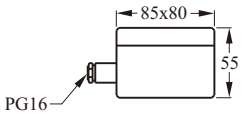

Material : PC
Enclosure : IP65
Max.Temp.: -20°C ~80°C

K Explosion-proof

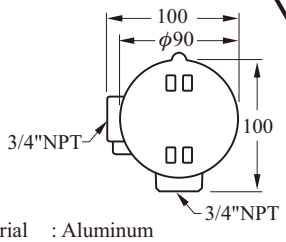

Material : Aluminum
Enclosure : CESI 03 ATEX 108
ATEX Ex II 2G Ex d IIB T6
Max.Temp.: -20°C ~100°C

N

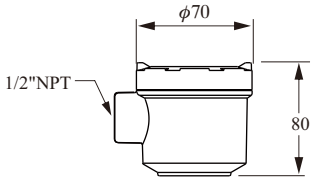

Material : SUS316
Enclosure : IP65
Max.Temp.: -20°C ~200°C

X

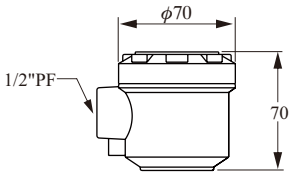

Material : Aluminum
Enclosure : IP65
Max.Temp.: -20°C ~100°C

FineTek

FLOAT SPECIFICATIONS

● FLOAT SPECIFICATION

Dimension	Type	AxBxC(mm)	S.G.	Max. Pressure (kg/cm^2)	Material	Max. Temp. (°C)	Approx. Weight (g)
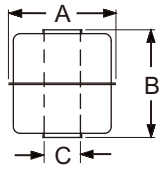	S3	45x55x15	0.65	12	SUS 316	200°C	37.6
	S6	75x108x19	0.5	10	SUS 304	200°C	165
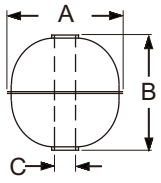	S4	52x52x15	0.55	30	SUS 316	200°C	33.4
	S5	75x73x19	0.55	30	SUS 304	200°C	102.4
	S8	100x100x20	0.5	15	SUS 304	200°C	249.7
	S9	150x150x30	0.45	15	SUS 304	200°C	534
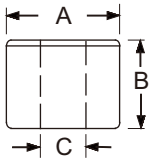	P3	48x45x18.5	0.6	5	PP	80°C	35.5
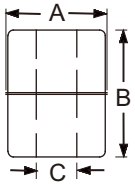	F4	48x62x18	0.75	5	PVDF	120°C	65.3

TRANSDUCER

MODEL: TAB-2110 Transducer

Power Supply	: 12~36Vdc
Output Current	: Loop power 4~20mA
Load Resistance	: RL(Max)=50(Vs-8)
Ambient Temperature	: -40~80°C
Ambient Humidity	: 0~80% RH
Accuracy	: ±0.1%(25°C)
Temperature Effect	: 0.01%F.S./°C
Adjustment Range	: Span Adjustment 20% FS Zero Adjustment 5% FS

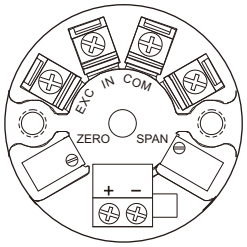

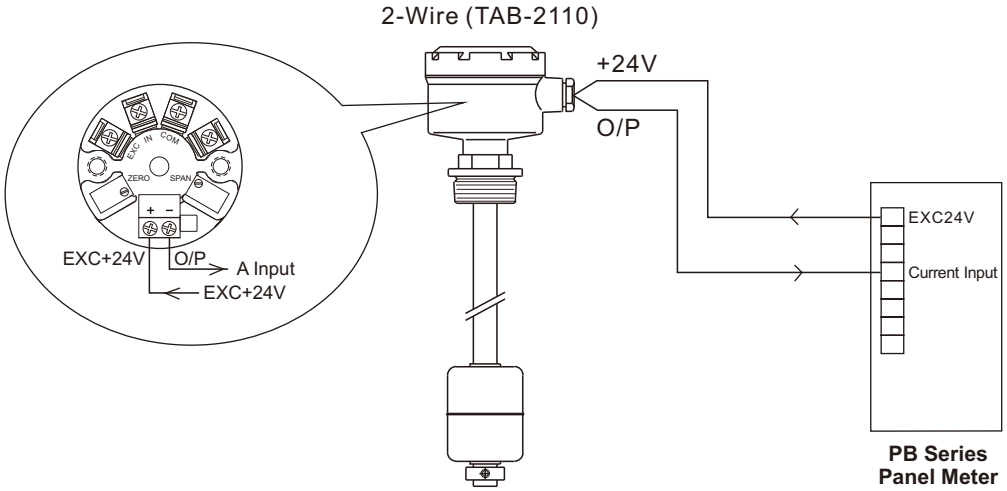

ECONOMICAL

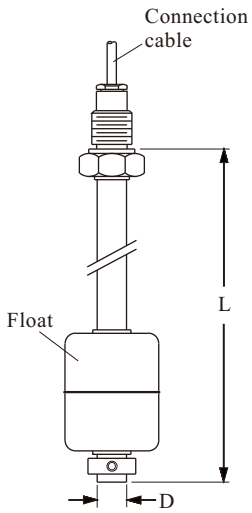

● SPECIFICATIONS

Connection Cable: Silicon cable 3C × 1M
Output: 3-wire resistance output
Total Resistance: 1MΩ (Max.)

Operating Temp.: PP tube -10 °C ~ 80 °C
PVDF tube -20 °C ~ 120 °C
SUS tube -20 °C ~ 120 °C

Order No.	Connection	Tube size & Material (D)		Float type & Material		Suitable S.G.	Measuring Range
FG□-AR4	3/8"PF	ϕ14	SUS 304 SUS 316	S3: ϕ45x55 S4: ϕ52x52	SUS 316 SUS 316	>0.65 >0.55	FGA...Max.6M FGB...Max.6M
FG□-AR7	3/8"PF	ϕ17.2	SUS 304	S5: ϕ75x73 S6: ϕ75x108	SUS 304	>0.55 >0.5	FGA...Max.6M FGB...Max.6M
FGB-CR5P3	3/4"PF	ϕ17.2	PP	P3: ϕ48x45	PP	>0.6	FGB...Max.6M
FGB-CR6F4	3/4"PF	ϕ16	PVDF	F4: ϕ48x62	PVDF	>0.75	FGB...Max.6M

MODEL : FG□–□□ □ □□ □□□□

- Length (unit: mm)
- Float Type (see page 2)
- Tube Type (see page 9)
- Connecting Type (see page 9)
- Resolution (see page 9)
  - A: 6.35mm (3 wire)
  - B: 12.7mm (3 wire)

STANDARD

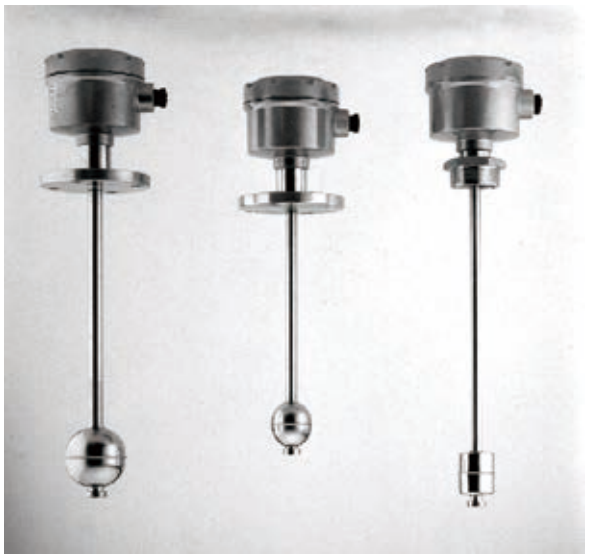

★ B type housing, dimension see page 2.

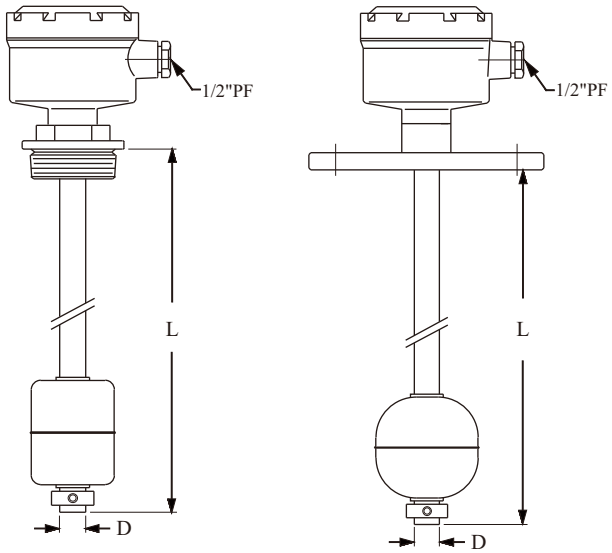

● SPECIFICATION

Terminal Housing: Aluminum, IP65
Output:4~20mA, 2-wire
Total resistance : 1MΩ (Max.)

Operating Temperature: -20 ~ 120 °C
Ambient Temperature: 0~70 °C

Order No.	Connection	Tube size & Material (D)		Float type & Material		Suitable S.G.	Measuring Range
FG□BFQ4	2"PT	ϕ14	SUS 316 SUS 304	S3: ϕ45x55 S4: ϕ52x52	SUS 316 SUS 316	>0.65 >0.55	FGC/D...Max.6M
FG□BGN4	2-1/2"x10kg/cm^2	ϕ14	SUS 316 SUS 304	S3: ϕ45x55 S4: ϕ52x52	SUS 316 SUS 316	>0.65 >0.55	FGC/D...Max.6M
FGDBHN7	3"x10kg/cm^2	ϕ17.2	SUS 304	S5: ϕ75x73 S6: ϕ75x108	SUS 304 SUS 304	>0.55 >0.5	FGD...Max.6M
FGDBIQ7	4"PT	ϕ17.2	SUS 304	S8: ϕ100x100	SUS 304	>0.5	FGD...Max.6M
FGDBKN8 **FGDBKN9**	6"x10kg/cm^2	ϕ21.7 ϕ27.2	SUS 304	S9: ϕ150x150	SUS 304	>0.45	FGD...Max.12M

MODEL : FG□ B □□ □ □□ □□□□

- Length (unit: mm)
- Float Type (see page 2)
- Tube Type (see page 9)
- Connection Type (see page 9)
- Housing Type (see page 2)
- Resolution (see page 9)
  - C: 6.35mm (2 wire)
  - D: 12.7mm (2 wire)

ANTI-CORROSIVE

★ C type housing, dimension see page 2.

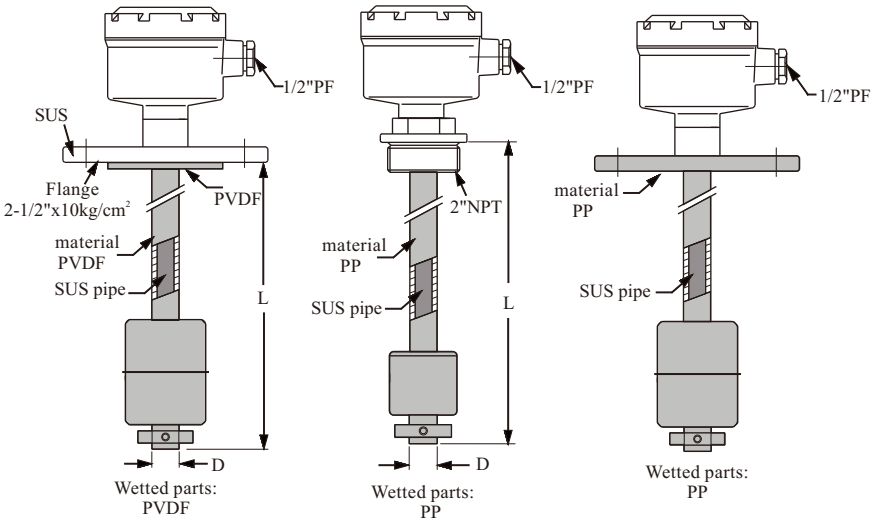

● SPECIFICATIONS

Terminal Housing: PP +Fiber, IP65
Output: 4~20mA, 2-wire
Ambient Temperature: 0~70 °C
Operating Temperature: PP jacket tube-10 ~ 80 °C
PVDF jacket tube -20 ~ 120 °C
Total resistance: 1MΩ (Max.)

Order No.	Connecting	Tube size & Material (D)		Float type & Material		Suitable S.G.	Measuring Range
FGDCFQ5P3	2"PT	ϕ17.2	PP	P3: ϕ48x45	PP	>0.55	FGD...Max.6M
FGDCFQ6F4	2"PT	ϕ16	PVDF	F4: ϕ48x62	PVDF	>0.75	FGD...Max.6M
FGDCGN5P3	2-1/2"x10kg/cm²	ϕ17.2	PP	P3: ϕ48x45	PP	>0.6	FGD...Max.6M
FGDCGN6F4	2-1/2"x10kg/cm²	ϕ16	PVDF	F4: ϕ48x62	PVDF	>0.75	FGD...Max.6M

Every unit is protected by a PP or PVDF flange to prevent the sensing rod from corrosion.

MODEL : FG D C□□ □ □□ □□□□

- Length (unit: mm)
- Float Type (see page 2)
- Tube Type (see page 9)
- Connection Type (see page 9)
- Housing Type (see page 2)
- Resolution (see page 9)
- D: 12.7mm (2 wire)

⋆K type ATEX Explosion proof enclosure can be selected (see p2).

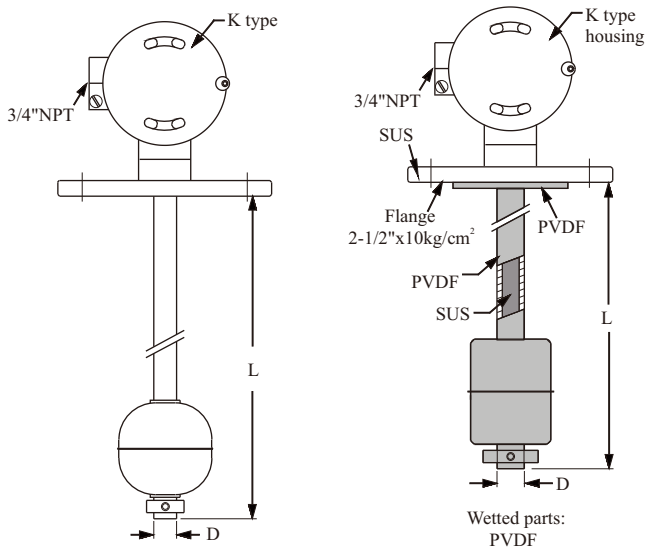

● SPECIFICATION

Terminal Housing: K type --- Aluminum, ATEX Ex d IIB T6
Output: 4~20mA, 2-wire
Ambient Temperature: 0~70 °C
Total resistance: 1MΩ (Max.)

Operating Temperature: PP tube -10 ~ 80°C
PVDF tube -20 ~ 120°C
SUS tube -20 ~ 120°C

Order No.	Connection	Tube size & Material (D)		Float type & Material		Suitable S.G.	Measuring Range
FG□KFQ4	2"PT	ϕ14	SUS 304	S4: ϕ52x52	SUS 316	>0.55	FGA/B...Max.6M FGC/D...Max.6M
FG□KGN4	2-1/2"x10kg/cm^2	ϕ14	SUS 304	S4: ϕ52x52	SUS 316	>0.55	FGA/B...Max.6M FGC/D...Max.6M
FGDKHN7	3"x10kg/cm^2	ϕ17.2	SUS 304	S6: ϕ75x108	SUS 304	>0.5	FGD...Max.6M
FGDKIQ4	4"PT	ϕ17.2	SUS 304	S8: ϕ100x100	SUS 304	>0.5	FGD...Max.6M
FGDKFQ5P3	2"PT	ϕ17.2	PP	P3: ϕ48x45	PP	>0.6	FGD...Max.6M
FGDKFQ6F4	2"PT	ϕ16	PVDF	F4: ϕ48x62	PVDF	>0.75	FGD...Max.6M
FGDKGN5P3	2-1/2"x10kg/cm^2	ϕ17.2	PP	P3: ϕ48x45	PP	>0.6	FGD...Max.6M
FGDKGN6F4	2-1/2"x10kg/cm^2	ϕ16	PVDF	F4: ϕ48x62	PVDF	>0.75	FGD...Max.6M

MODEL : FG □ □ □□ □ □□ □□□□

- Length (unit: mm)
- Float Type (see page 2)
- Tube Type (see page 9)
- Connecting Type (see page 9)
- Housing Type (see page 2)
- Resolution (see page 9)
  - C: 6.35mm (2 wire)
  - D: 12.7mm (2 wire)

FineTek

MULTI-FUNCTIONAL

- Double insulation to prevent moisture damage on PCB.
- Data can be displayed by the LCD panel on the transmitter.
- Power supply: 12~36 Vdc
- Photo Coupler * 2
- Reed module is designed with protective housing to ensure stability and to prevent damage during transportation,installation and operation.
- Accuracy is not affected by temperature or pressure.
- Circuit design is stable and reliable.

● SPECIFICATIONS

Terminal Housing: Aluminum/PP+Fiber (IP65)
Measured Total Resistance: 1MΩ (Max.)
Output: 2 Wire 4-20mA Output
Ambient Temp.: -40~80℃
Operation Temp.:
P.P.: -10℃~80℃
PVDF: -20℃~120℃
Power Supply: Loop Power 12~36Vdc
Output Current: 4~20mA
Output Linear Range: 3.8~21.5mA

Output Latch: 3.5mA, 22mA (Please reboot to delatch)
Upper Output: 22mA
Lower. Output: 3.5mA
LCD Display: -1999~9999
Load Resistance: RL= (Vs-12)*50Ω
Environment Humidity: 0~80% RH
Accuracy: 0.1%F.S. (25℃)
Temperature Coefficient: ±0.01% FS/℃
Alarm Output:
Mode: Photo coupler x 2
Contact Capacity: 8~30Vdc (50mA)
Operation Model: Alarm: Process High Alarm/
Process Low Alarm

FG□F Series Standard Model

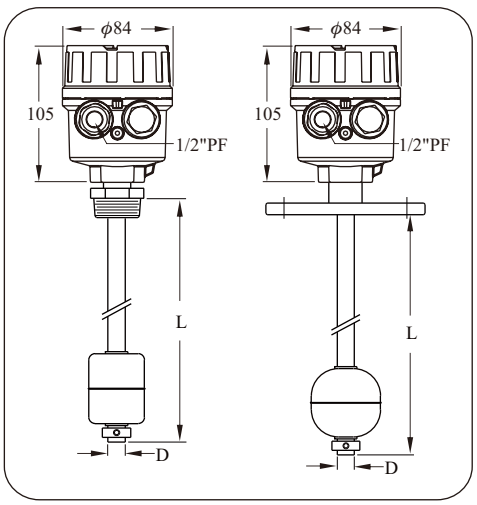

FG□F Series Anti-Acid/Alkaline Model

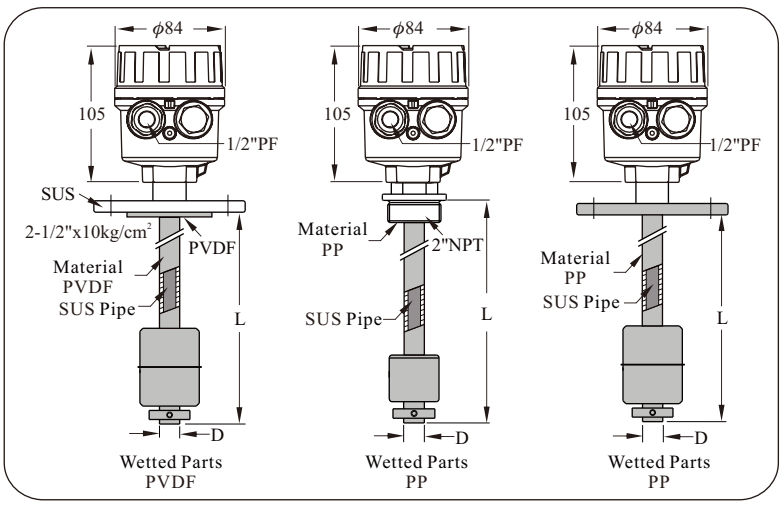

FineTek

HOW TO ORDER

FG D C F Q 6 F 1 1 5 0 0 (P)

RESOLUTION

A : 6.35mm (3-wire)
B : 12.7mm (3-wire)
C : 6.35mm (2-wire)
D : 12.7mm (2-wire)
S : Others
E : 6.35mm (Multi-Function)
F : 12.7mm (Multi-Function)
G : 6.35mm (Multi-Function+HART)
H : 12.7mm (Multi-Function+HART)

TERMINAL HOUSING (see page 2)

B : Aluminum
C : P.P
D : Aluminum
E : AL.
G : PC
K : Aluminum
N : SUS
F : Aluminum
- : None
S : Others
X : Aluminum

CONNECTION

Dimension		Specification	
A: 3/8" (10A)	H: 3" (80A)	M: 5 Kg/cm^2	U : NPT
B: 1/2" (15A)	I : 4" (100A)	N:10 Kg/cm^2	V : GAS
C: 3/4" (20A)	J : 5" (125A)	O: 150 Lbs	S : Others
D: 1" (25A)	K: 6" (150A)	P : 300 Lbs	
E: 11/2" (40A)	4 : 7" (175A)	Q: PT	
F: 2" (50A)	5 : 8" (200A)	R: PF(G)	
G: 21/2" (65A)		T : BSP	

※ Tri-Clamp 1-1/2"=ES; 2"=FS

TUBE TYPE & MATERIAL

0: ϕ12.7 (SUS304)
Only available for resolution 12.7mm.
4: ϕ14 (SUS304)
5: ϕ17.2 (P.P.)
6: ϕ16 (PVDF)
7: ϕ17.2 (SUS304)
8: ϕ21.7 (SUS304)
9: ϕ27.2 (SUS304)
C: ϕ12.7 (SUS316)
Only available for resolution 12.7mm.
B: ϕ14 (SUS316)
D: ϕ17.2 (SUS316)
E: ϕ21.7 (SUS316)
F: ϕ27.2 (SUS316)

※ For 5&6, measuring range>500mm, only ±12.7mm resolution is available.

FLOAT TYPE (see page 2)

Material	Type					
Plastic	P3	F4				
SUS	S3	S4	S5	S6	S8	S9

- : None

LENGTH (UNIT : mm)

0500: 500mm up
1000: 501~1000mm
1500: 1001~1500mm
⋮

※ 500mm per Unit

PIPE SHIELD

★ Total product length's margin of error ±5mm.
★ Characteristics, specifications and dimensions are subject to change.

NEPSI PROOF No.GYJ111211 Ex d IIC T3~T6
PTB PROOF No. 05 ATEX 1028 Ⓔx II 2G Ex d IIB T3~T6
Ⓔx II 2D Ex tb IIIC
T85°C~T200°C Db IP65

ENCLOSURE EXPLOSION PROOF

★ D or N type housing can be selected.

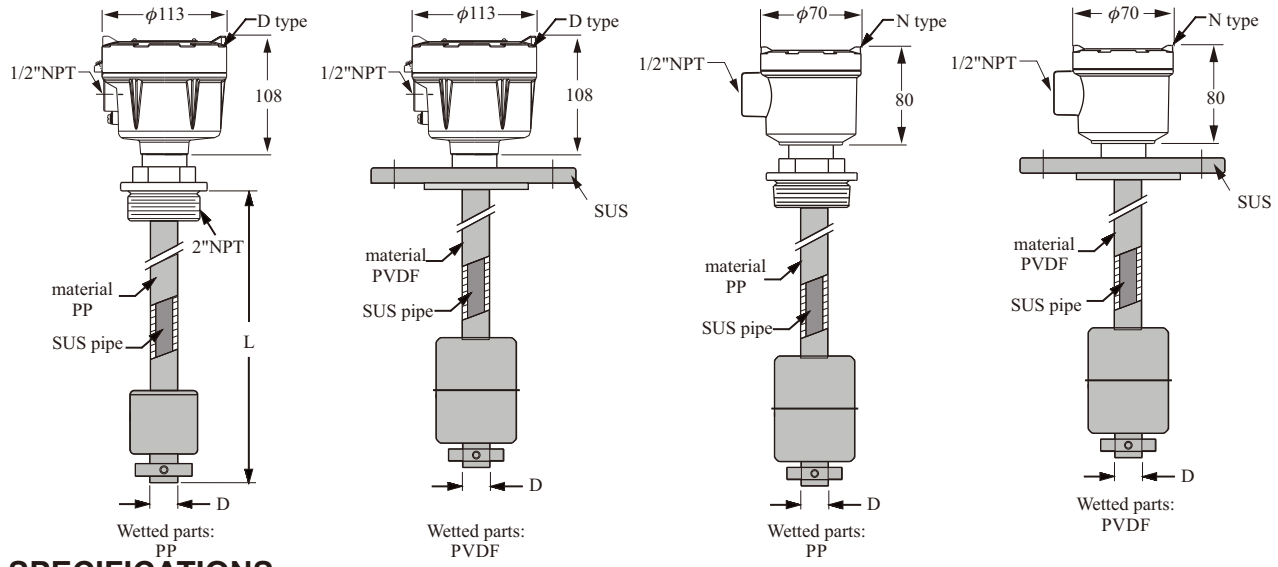

● SPECIFICATIONS

Terminal Housing: D type --- Aluminum
N type --- SUS
Output: 4~20mA, 2-wire
Ambiently: 0~70 °C

Total Resistance: 1MΩ (Max.)
Operation Temperature: PP tube -10 ~ 80 °C
PVDF tube -20 ~ 120 °C

MODEL NO. FG7	Connecting	Tube size (D) & Material		Float type & Material		Suitable S.G.	Measuring Range
FG7□DFQ4	2"PT	ϕ14	SUS 316	S3: ϕ45x55	SUS 316	>0.65	FG7...Max.3M
FG7□DGN4	2-1/2"x10kg/cm^2	ϕ14	SUS 316	S3: ϕ45x55	SUS 316	>0.65	FG7...Max.3M
FG7DDHN7	3"x10kg/cm^2	ϕ17.2	SUS 304	S5: ϕ75x73	SUS 304	>0.55	FG7...Max.6M
FG7DDIQ4	4"PT	ϕ17.2	SUS 304	S8: ϕ100x100	SUS 304	>0.5	FG7...Max.6M
FG7DDKN8 **FG7DDKN9** **FG7DDKN8** **FG7DDKN9**	6"x10kg/cm^2	ϕ21.7 ϕ27.2	SUS 304	S9: ϕ150x150	SUS 304	>0.45	FG7...Max.6M
FG7DDFQ5P3	2"PT	ϕ17.2	PP	P3: ϕ48x45	PP	>0.6	FG7...Max.6M
FG7DDFQ6F4	2"PT	ϕ16	PVDF	F4: ϕ48x62	PVDF	>0.75	FG7...Max.6M
FG7DDGN5P3	2-1/2"x10kg/cm^2	ϕ17.2	PP	P3: ϕ48x45	PP	>0.6	FG7...Max.6M
FG7DDGN6F4	2-1/2"x10kg/cm^2	ϕ16	PVDF	F4: ϕ48x62	PVDF	>0.75	FG7...Max.6M

MODEL NO.:FG7 □ □ □□ □ □□ □□□□

- Length (unit: mm)
- Float Type (see page 2)
- Tube Type (see page 11)
- Connecting Type (see page 11)
- Housing Type (see page 2)
- Resolution (see page 11)
  - C: 6.35mm (2 wire)
  - D: 12.7mm (2 wire)

FineTek

HOW TO ORDER

Order No. FG7 D D F Q 6 F 1 1 5 0 0 (L)

EXPLOSION PROOF

RESOLUTION

A : 6.35mm (3-wire)
B : 12.7mm (3-wire)
C : 6.35mm (2-wire)
D : 12.7mm (2-wire)

TERMINAL HOUSING (see page 2)

D: AL
N: SUS

CONNECTION

Dimension		Specification	
A : 3/8" (10A)	H: 3" (80A)	M: 5 Kg/cm^2	U: NPT
B : 1/2" (15A)	I : 4" (100A)	N:10 Kg/cm^2	V: GAS
C : 3/4" (20A)	J : 5" (125A)	O:150 Lbs	S: Others
D : 1" (25A)	K : 6" (150A)	P : 300 Lbs	
E : 11/2" (40A)	4 : 7" (175A)	Q: PT	
F : 2" (50A)	5 : 8" (200A)	R: PF(G)	
G : 21/2" (65A)		T : BSP	

TUBE TYPE & MATERIAL

0: ϕ12.7 (SUS)
Only available for resolution 12.7mm.
4: ϕ14 (SUS)
5: ϕ17.2 (P.P.)
6: ϕ16 (PVDF)
7: ϕ17.2 (SUS)
8: ϕ21.7 (SUS)
9: ϕ27.2 (SUS)

C: ϕ12.7 (SUS316)
Only available for resolution 12.7mm.
B: ϕ14 (SUS316)
D: ϕ17.2 (SUS316)
E: ϕ21.7 (SUS316)
F: ϕ27.2 (SUS316)

※ For 5&6, measuring range>500mm, only ±12.7mm resolution is available.

FLOAT TYPE (see page 2)

Material	Type					
Plastic	P3	F4				
SUS	S3	S4	S5	S6	S8	S9

LENGTH (UNIT : mm)

0500: 500mm up
1000: 501~1000mm
1500: 1001~1500mm
⋮

※ 500mm per Unit

TAG

★ Total product length's margin of error ±5mm.
★ Characteristics, specifications and dimensions are subject to change.

INSTALLATION

► The float level transmitter should be mounted far away from the inlet, Any rigorous liquid turbulence will produce error output signals.

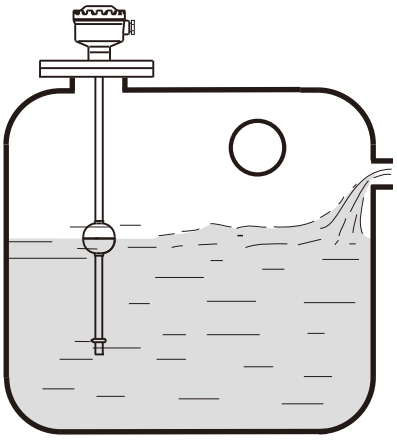

► A pipe shield or an equivalent device can help normalize the indicator actuation especially when an agitator is present.

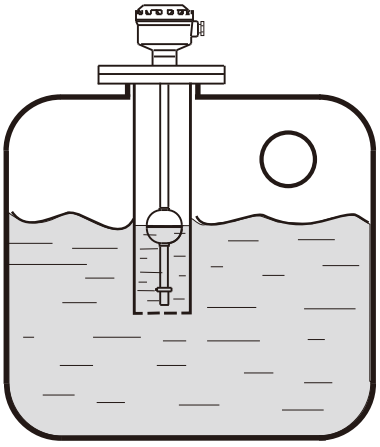

► Another useful alternative is an L type support frame when the level indicator is mounted in concrete wall tank as figure below.

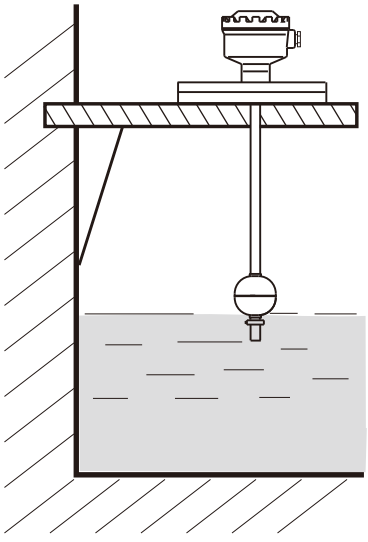

► It is recommended to select the standpipe with diameter (d) larger than the float for the installation process.

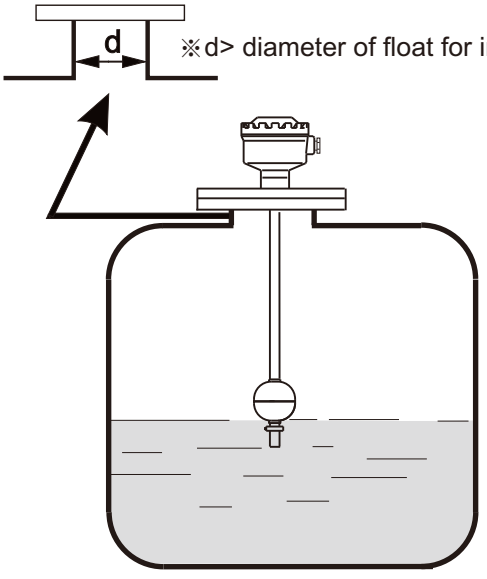

※d> diameter of float for installation.

EXAMPLES OF TANK MOUNTING

[FC/FD]	Mini Float/Magnetic Float Level Switch
[FG]	Magnetic Float Level Transmitter
[FF]	Side Mounting Float Switch
[FA/FB]	Cable Float Level Switch
[SP]	Thermal Dispersion Flow Switch
[SF]	Paddle Flow Switch
[SD]	Optical Level Switch
[SE]	Rotary Paddle Level Switch
[SA]	Capacitance Level Switch
[EC]	Pressure Level Transmitter
[LR]	Loop Power Indicator
[SC]	Vibrating Probe Level Switch
[SC]	Tuning Fork Level Switch
[EB]	RF-Capacitance Level Transmitter
[SB]	RF-Capacitance / Admittance Level Switch
[EG]	Magnetostrictive Level Transmitter
[EF]	By-Pass Level Transmitter
[MEF]	Mini By-Pass Level Transmitter
[EA]	Ultrasonic Level Transmitter
[JFR]	FMCW Radar Level Transmitter
[EE]	Electromechanical Level Measuring System
[ED]	Speed Monitor
[SRT/SRS]	Conveyer Belt Misalignment Switch & Safety Cable Pull Switch
[PB/PM]	Microprocessor Based Bargraphic Display Scaling Meter
[BRD/AE]	Valve and Controller for Dust Collector System
[BAS/BAH/BVP]	Air Hammer
[BVK/BVR/BVT]	Pneumatic Vibrator

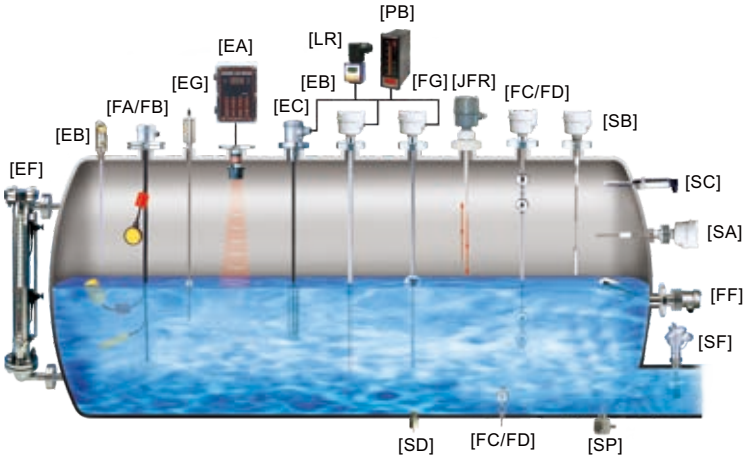

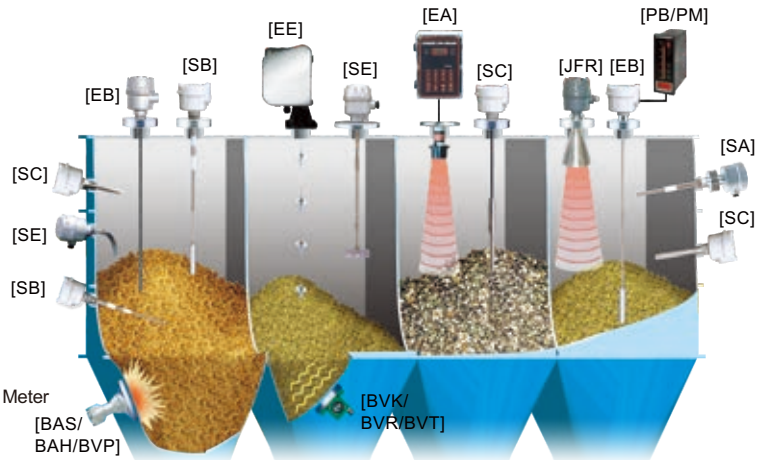

FineTek Co., Ltd.
No.16, Tzuchiang St., Tucheng Industrial Park, New Taipei City 236, Taiwan.
TEL: 886 2 2269 6789 FAX: 886 2 2268 6682
Email: info@fine-tek.com http://www.fine-tek.com

Taichung Branch TEL: 886 4 2337 0825 FAX: 886 4 2337 0836
Tainan Branch TEL: 886 6 289 0635 FAX: 886 6 289 4073
Kaohsiung Branch TEL: 886 7 333 6968 FAX: 886 7 536 8758

Fine automation (ShangHai) Co., Ltd.
No.451 DuHui Rd, MinHang District, Shanghai, China 201109
TEL: 86 21 6490 7260 FAX: 86 21 6490 7276
Email: info.sh@fine-tek.com

FineTek Pte Ltd.
No. 60 Kaki Bukit Place, #07-06 Eunos Techpark 2
Lobby B, Singapore 415979
TEL: 65 6452 6340 FAX: 65 6734 1878
Email: info.sg@fine-tek.com

FineTeK GmbH
Frankfurter Str. 62, OG D-65428 Ruesselsehim, Germany
TEL: 49 6142 17608 0 FAX: 49 6142 17608 20
E-Mail: info@fine-tek.de

Aplus Finetek Sensor inc.
355 S. Lemon Ave, Suite D, Walnut, CA 91789
Tel : 1 909 598 2488 Fax : 1 909 598 3188
Email: peter.wu@aplusfine.com

FineTek
Your Made-To-Order Solutions

Distributor:

08-FG-B0-EP, 03/25/2013